18TBW100

8Ω

LF Drivers - 18.0 Inches

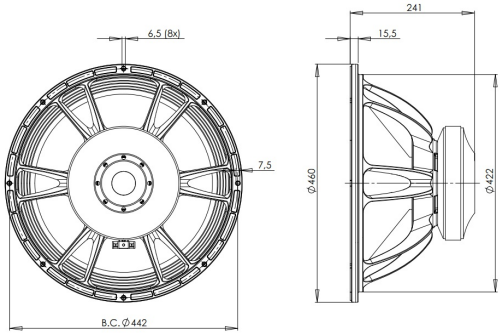

- 3000 W continuous program power capacity
- 100 mm (4 in) split winding copper voice coil
- 35 - 1000 Hz response
- 96 dB sensitivity
- 57 mm peak-to-peak excursion before damage
- Double silicone spider with optimized compliance
- Ventilated voice coil gap for reduced power compression
- Aluminium demodulating ring for very low distortion

B&C Speakers s.p.a.

Via Poggiomoro, 1 - Loc. Vallina, 50012 Bagno a Ripoli (FI) - ITALY - Tel. +39 055 65721 - Fax +39 055 6572312 - mail@bcspeakers.com

18TBW100

LF Drivers- 18.0 Inches

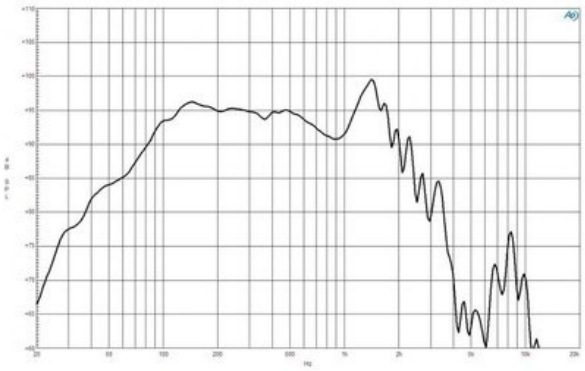

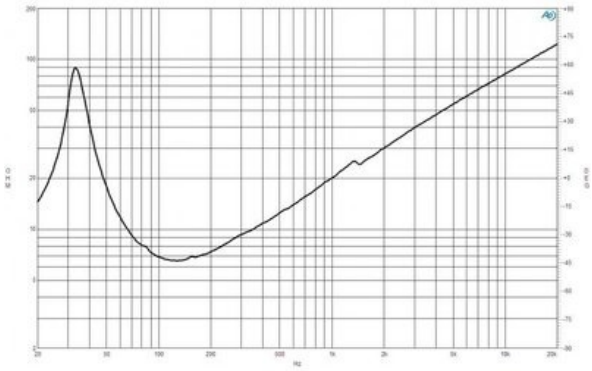

SPECIFICATIONS

Nominal Diameter	460 mm (18.0 in)
Nominal Impedance	8 Ω
Minimum Impedance	6.5 Ω
Nominal Power Handling[1]	1500 W
Continuous Power Handling[2]	3000 W
Sensitivity[3]	96.0 dB
Frequency Range	35 - 1000 Hz
Voice Coil Diameter	100 mm (4.0 in)
Winding Material	Copper
Former Material	Glass Fibre
Winding Depth	31.0 mm (1.22 in)
Magnetic Gap Depth	15.0 mm (0.59 in)
Flux Density	1.15 T

DESIGN

Surround Shape	Triple Roll
Cone Shape	Radial
Magnet Material	Ferrite
Spider	Double Silicone
Pole Design	T-Pole
Woofer Cone Treatment	TWP Waterproof Both Sides
Recommended Enclosure	200.0 dm^3 (7.06 ft^3)
Recommended Tuning	32 Hz

PARAMETERS[4]

Resonance Frequency	35 Hz
Re	5.3 Ω
Qes	0.41
Qms	8.0
Qts	0.39
Vas	175.0 dm^3 (6.18 ft^3)
Sd	1210.0 cm^2 (187.6 in^2)
η_0	1.76 %
Xmax	12.0 mm
Xvar	14.0 mm
Mms	245.0 g
Bl	26.4 Txm
Le	2.45 mH
EBP	85 Hz

MOUNTING AND SHIPPING INFO

Overall Diameter	460 mm (18.0 in)
Bolt Circle Diameter	442 mm (17.4 in)
Baffle Cutout Diameter	422.0 mm (16.6 in)
Depth	241 mm (9.5 in)
Flange and Gasket Thickness	16 mm (0.61 in)
Air Volume Occupied by Driver	11.0 dm^3 (0.39 ft^3)
Net Weight	15.1 kg (33.3 lb)
Shipping Units	1
Shipping Weight	16.7 kg (36.82 lb)
Shipping Box	500x495x275 mm (19.69x19.49x10.83 in)

SERVICE KIT

RCK18TBW1008

1. 2 hours test made with continuous pink noise signal within the range Fs-10Fs. Power calculated on rated nominal impedance. Loudspeaker in free air.
2. Power on Continuous Program is defined as 3 dB greater than the Nominal rating.
3. Applied RMS Voltage is set to 2.83 V for 8 ohms Nominal Impedance.
4. Thiele-Small parameters are measured after a high level 20 Hz sine wave preconditioning test.

B&C Speakers s.p.a.

Via Poggiomoro, 1 - Loc. Vallina, 50012 Bagno a Ripoli (FI) - ITALY - Tel. +39 055 65721 - Fax +39 055 6572312 - mail@bcspeakers.com